909101/909102/909103/909104
INSTALLATION INSTRUCTIONS

Please read carefully and save these instructions as you may need them a later date.

CAUTION

Turn off the main power at the circuit breaker before installing the fixture in order to prevent possible shock.

GENERAL

All electrical connections must be in accordance with local and National Electrical Code (N.E.C.) standards. If you are unfamiliar with proper electrical wiring connections obtain the services of a qualified electrician.

Remove the fixture and the mounting package from the box and make sure that no parts are missing by referencing the illustration.

ASSEMBLY AND INSTALLATION

1. Loosen mounting screw(10) to remove mounting plate (6) from fixture back plate(9).
2. Secure the round mounting plate(6) to the outlet box(1) with box screws(8).
3. Pull out the wires and ground wire from the Outlet Box(1).
   Make wire connections with wire nut(5)
   ---White wire from light to White Wire(3) from power source.
   ---Black wire from light to Black Wire(2) from power source.
   ---Tie the ground wire(4) from fixture and from outlet box(1) to the ground screw(7) on the mounting plate(6).
4. Align the Back plate(9) to the Outlet box(1),then secure it to the round mounting plate(6) with the mounting screws(10).
5. Place the glass shade(12) onto the socket(11),then secure with socket ring(13).
6. Install bulbs:(bulbs not included)↵
   (Don't exceed the maximum capacity recommended on the Socket rings).↵

INSTALLATION IS NOW COMPLETED

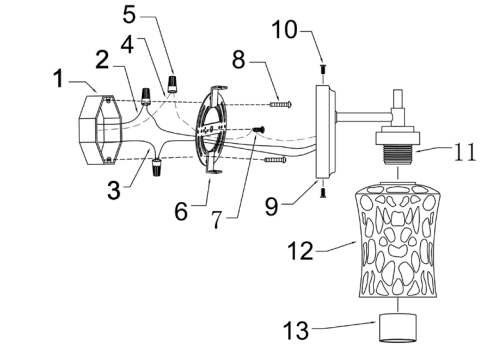

1. OUTLET BOX
2. BLACK WIRE
3. WHITE WIRE
4. GROUND WIRE
5. WIRE NUT
6. MOUNTING PLATE
7. GROUND SCREW
8. BOX SCREW
9. BACKPLATE
10. MOUNTING SCREW
11. SOCKET
12. GLASS SHADE
13. SOCKET RING

