INSTALLATION MANUAL

Model: 3177

Edition:20240725V1.0

IMPORTANT SAFETY INSTRUCTIONS

Please read and understand this entire manual before attempting to assemble, install or operate the product.

WARNING:

Disconnect power by turning off the circuit breaker or by removing the fuse at the fuse box. (All electrical steps should be performed by a qualified person or electrician.)

Ensure wiring and outlet box are compliant with national and local electrical codes, including the NEC. SkyOutlet requires installation on the branch circuit solid 12 or 14 AWG wire.

CAUTION:

To reduce risk of fire, use three (3) E26 **Max 60-watt** incandescent A19 bulbs or CFL/LED equivalent.
This fixture is meant for indoor use, **SUITABLE FOR DRY LOCATIONS AND DAMP LOCATIONS**.

TOOL NEEDED:(NOT PROVIDED)

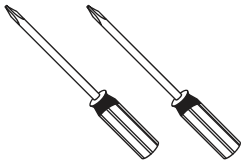

Ph#1&2



Safety Glasses



Step Ladder

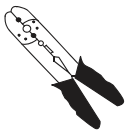

Wire Stripper



Pliers

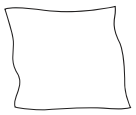

Soft Cloth

PACKAGE CONTENT

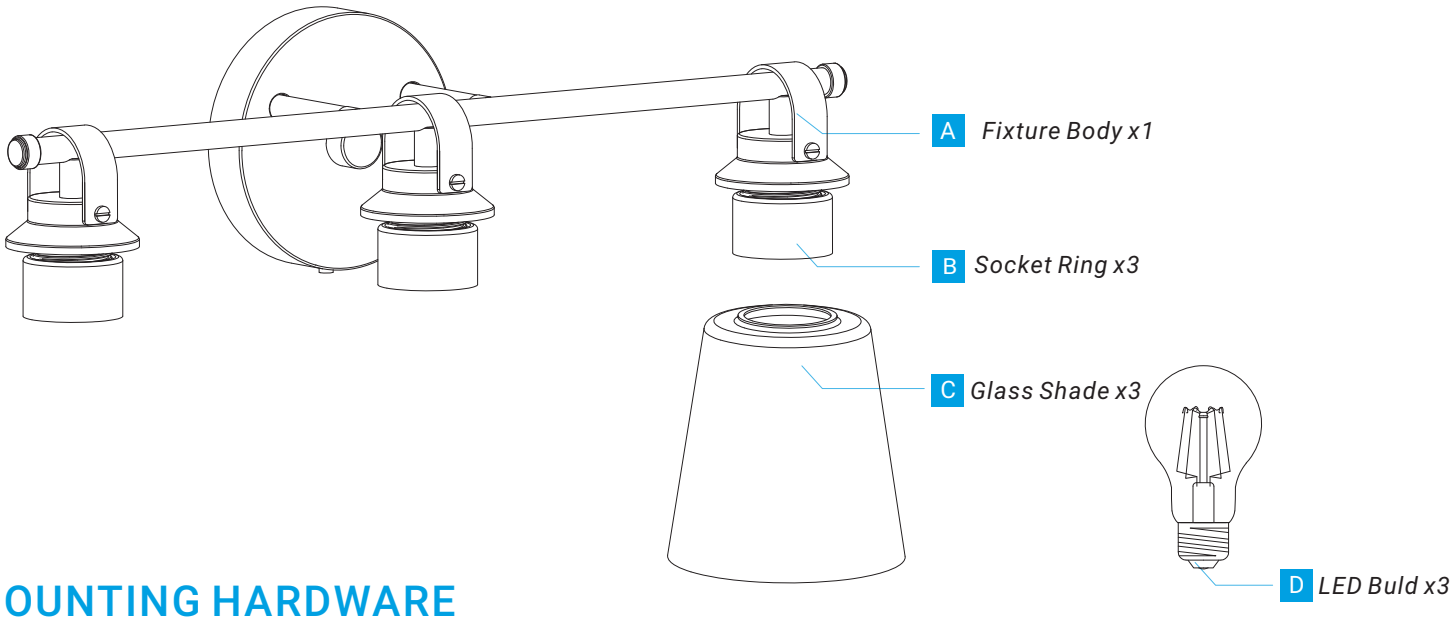

MOUNTING HARDWARE



AA *SkyOutlet x1*
with 2 rubber washers and 2 mounting screws

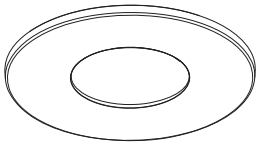

BB *Cover Plate x1*



CC *Cap x1*
Use when cleaning & painting or when fixture is not in use

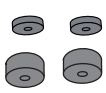

DD *4mm Washer x2*
7mm Washer x2



EE *Jumper Lead x2*
Optional

For assistance, email support@skyplug.com

Install SkyOutlet

IMPORTANT:
Disconnect power by turning off the circuit breaker or by removing the fuse at the box. All electrical steps should be performed by a qualified person or electrician.

Scan QR code below for reviewing SkyOutlet installation video.

1 Wire SkyOutlet to wall Junction box.

A. Strip wire to 9/16"/14mm.

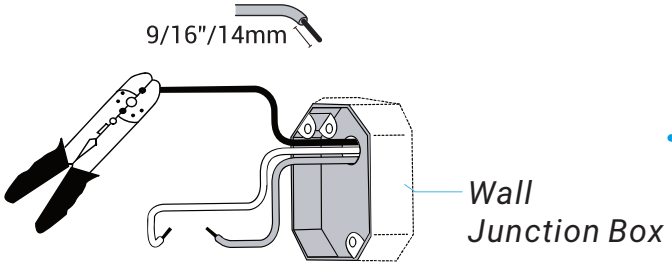

B. Loosen terminal screws to insert branch circuit wires into the corresponding terminals. Tighten to secure wires. Check to make sure wires are securely inserted into terminals. Set screw torque value at 6.3 lb/in.

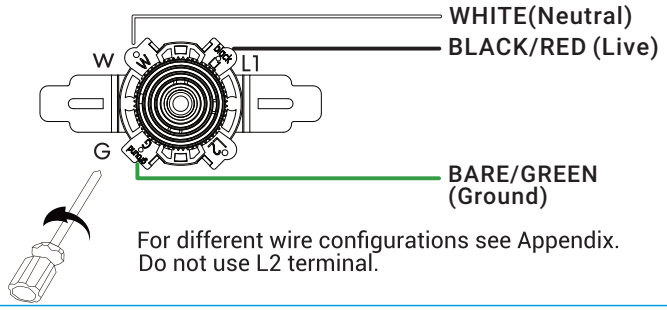

For different wire configurations see Appendix.
Do not use L2 terminal.

2 Secure SkyOutlet to outlet box using 2 screws and washers (included).

For different wire configurations see Appendix.

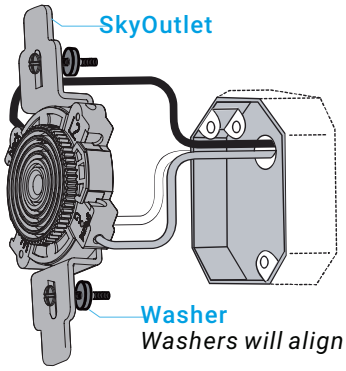

Washers will align the SkyOutlet with wall surface if the outlet box is recessed.

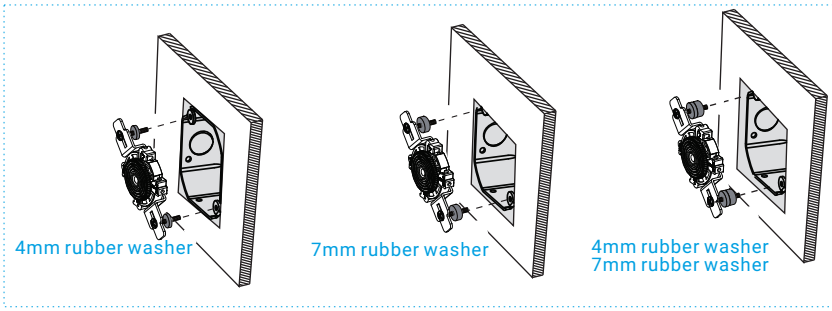

IMPORTANT: **If your box is flush with wall or recessed less than 1.5 mm (0.06”), use 4 mm washer.**
If recessed between 1.5 mm (0.06”) and 3 mm (0.12”) use larger 7 mm rubber washer.
If recessed more, use combination of both washers.

3 Secure cover plate as shown.

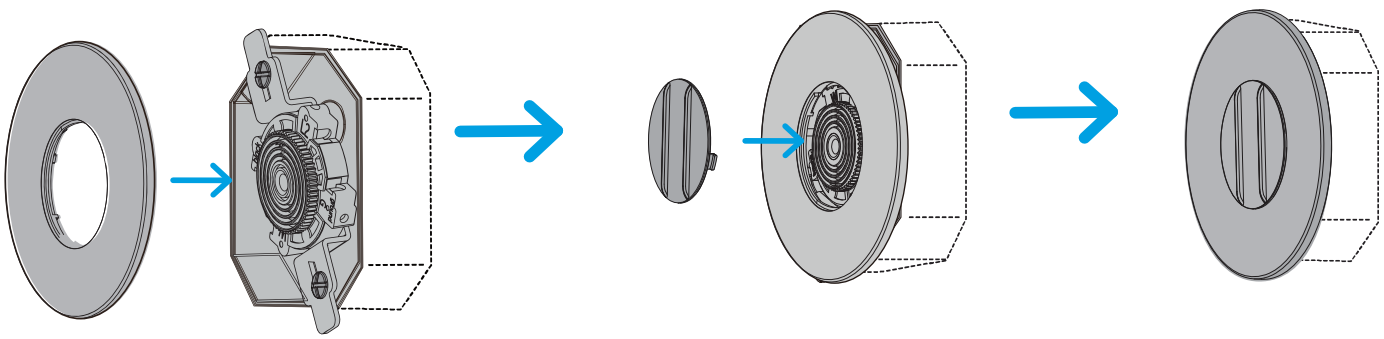

Align tabs on the cover plate with the SkyOutlet bracket and press to secure in place.

NOTE: A center cap is provided to cover and protect the SkyOutlet when the light fixture is removed for painting, maintenance, etc. To install the center cap, align the two slots on the cover plate and turn to secure.

Assemble Fixture

Scan QR code below for reviewing wall mount installation video.

Install glass shades and provided LED bulbs.

Recommended Bulb Type: E26-A19, Max.60W

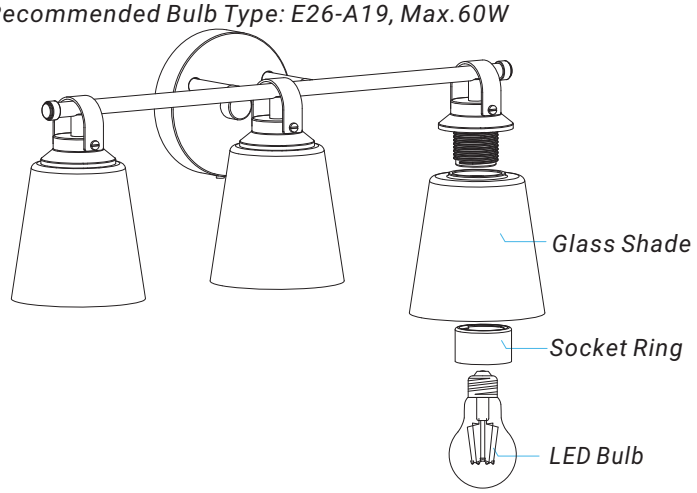

Connect SkyPlug to SkyOutlet

1 While supporting fixture, plug into the SkyOutlet.

TROUBLE LOCKING?
Loosen the knob slightly and push forward again.

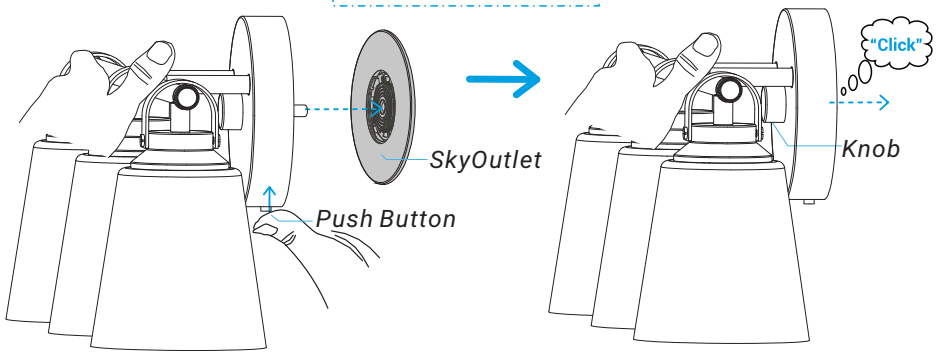

Align with the center hole and press the push button to insert into the SkyOutlet.

Once inserted, let go of the push button and push forward until you hear it “click.”

2 Tighten the Canopy.

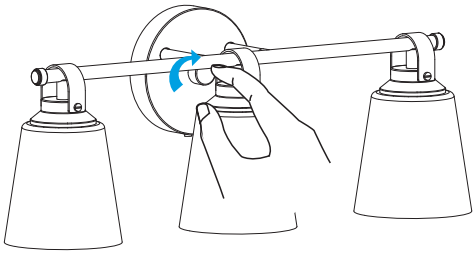

Tighten knob to secure canopy.

Removing SkyPlug Fixtures

1

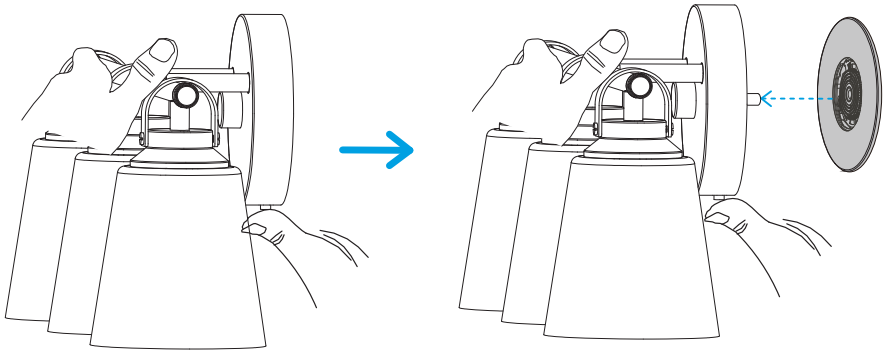

While supporting fixture, press push button to disengage SkyPlug from SkyOutlet.

2

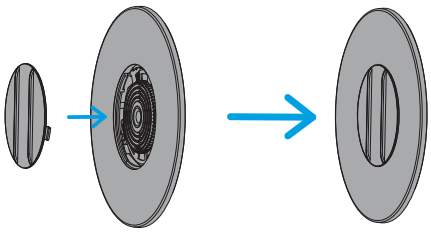

Cover up SkyOutlet when not in use .

For assistance, email support@skyplug.com

APPENDIX
Additional Wiring Diagram

IMPORTANT: If you have multiple wires inside your outlet box, you will need to determine which lead is the live or switched lead and insert this lead into L1. If you are not sure how your house is wired, contact 1-866-885-4649 for questions or contact an electrician. When multiple wires are connected together use a solid wire 12 or 14 AWG JUMPER LEAD (included) to insert into the receptacle terminal. **Do not use L2.**

WIRING DIAGRAM#1:

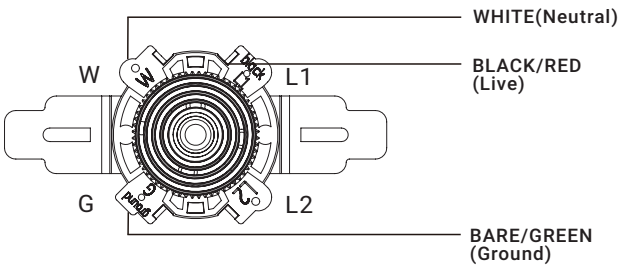

WIRING DIAGRAM#2:

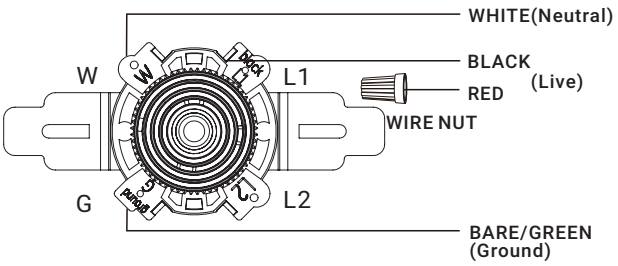

WIRING DIAGRAM#3:

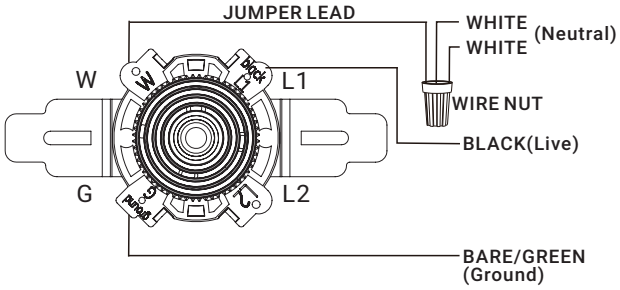

WIRING DIAGRAM#4:

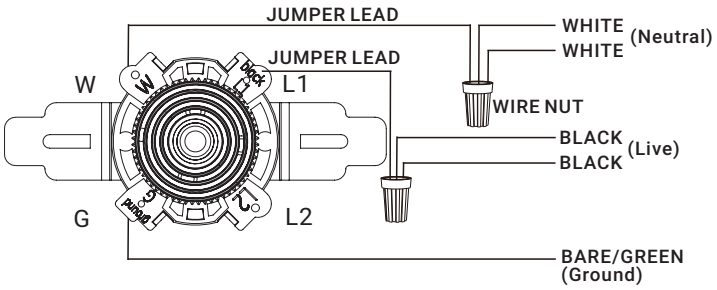

WIRING DIAGRAM#5:

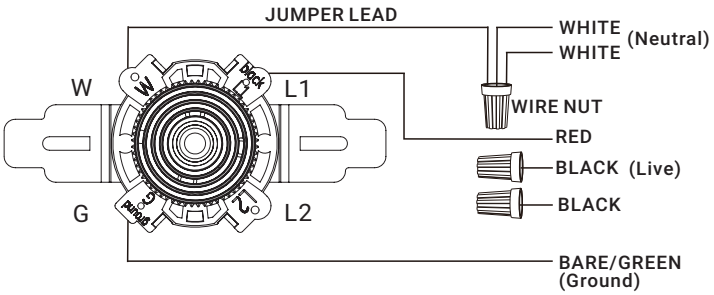

NOTE: If you have multiple wires connected together, add **the included JUMPER LEAD** and insert jumper lead into terminal. Only one single wire can be inserted into terminal (See diagram 3-5).

LIMITED PRODUCT WARRANTY

For warranty info, visit *www.skyplug.com/warranty*.