RUMBROOK

L5330-AGB/CAX

HUDSON VALLEY LIGHTING

A textural delight, Rumbrook features a tactile ceramic base with an etched treatment across its naturally porous surface. The unique base allows light and shadow to play within the grooves, creating a visually dynamic statement piece. A white linen shade tops this table lamp, adding a classic, fresh note to balance the earthy base.

*Due to the one-of-a-kind nature of the medium, exact colors and patterns may vary slightly from the image shown.

FINISHES

AGED BRASS w/ CERAMIC ANCIENT TEXTURE

DIMENSIONS / SPECS

Height: 29"
Width/Diameter: 23"
Canopy/Backplate: 6.5"
Product Weight: 34lb
Canopy/Backplate Shape: Round
Sloped Ceiling Compatible: No
Living Finish: No
Uplight Only: No

Shade 1: Textile
Shade 1 Finish: White Linen
Shade 1 Top Width: 4.25"
Shade 1 Bottom L/W: 0" / 23"
Shade 1 Height: 12.75"

ELECTRICAL

Bulb 1
Bulb Included: No
Socket: E26 Medium Base
Bulb Type: A19
Max Wattage: 15
Bulb Quantity: 1
Wire Length: 96"
Cord Type: SPT-2 BLACK FABRIC
Dimmer Type: Full Range Dimmer
Switch Type: FULL RANGE DIMMER ON SOCKET
Gem Box Required (2"x3"): No
Dark Sky: No
Convertible: No

Voltage:
UL Rating: cUL Dry

SHIPPING

Carton 1: 26" x 26" x 31"
Carton 1 Weight: 54lb
Shipping Method: Truck Only
Country of Origin: PH



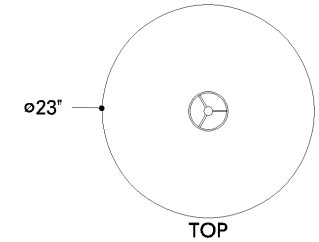

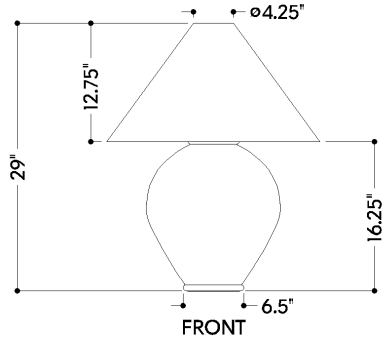

HUDSON VALLEY
LIGHTING GROUP