BERUN

8623-AGB

HUDSON VALLEY LIGHTING

A picture light with refined style, Berun features a slender tube accented by decorative embellishments. Gracefully curved arms support the light while an ornate loop-like finial adds a finishing touch. A sophisticated means of illuminating wall decor, Berun is available in two sizes and two finishes; Aged Brass and Old Bronze.

FINISHES

AGED BRASS

DIMENSIONS / SPECS

Height: 6.75"
Width/Diameter: 28.25"
Canopy/Backplate: 4.75"
Product Weight: 5.02lb
Extension: 6.75"
Top to Center: 2.25"
Canopy/Backplate Shape: Round
Sloped Ceiling Compatible: No
Living Finish: No
Uplight Only: No
Min Extension: 6.75"
Max Extension: 9.75"



ELECTRICAL

Bulb 1
Bulb Included: No
Socket: E26 Medium Base
Bulb Type: T10-9
Max Wattage: 15
Bulb Quantity: 2
Wire Length: 7"
Cord Type: B & W TEFLON W/ COPPER GROUND WIRE
Gem Box Required (2"x3"): No
Dark Sky: No
Convertible: No

Voltage:
UL Rating: cUL Damp

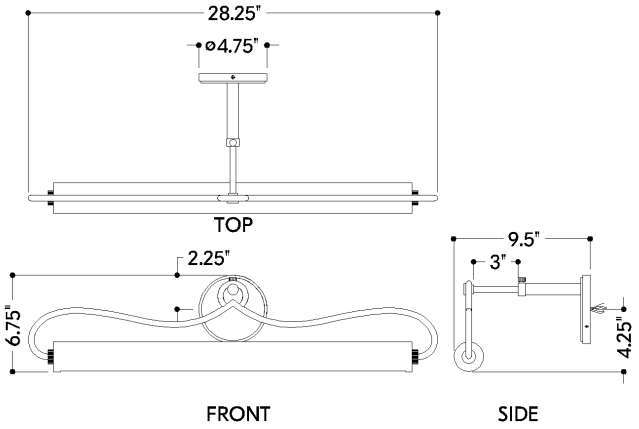

SHIPPING

Carton 1: 33" x 11" x 10"
Carton 1 Weight: 7lb
Shipping Method: Ground
Country of Origin: VN