EUROfase INC.

TEL 905.695.2055 **toll free** 1.800.660.5391
FAX 905.695.2056 **toll free** 1.800.660.5390

33 West Beaver Creek Road Richmond Hill, Ontario Canada L4B 1L8

COBURG, 20IN INTEGRATED LED PENDANT CHANDELIER



OPTIONS AVAILABLE

ITEM NO.	FINISH	SHADE
37346-010	GOLD	
37346-027	ANODIZED BLACK	

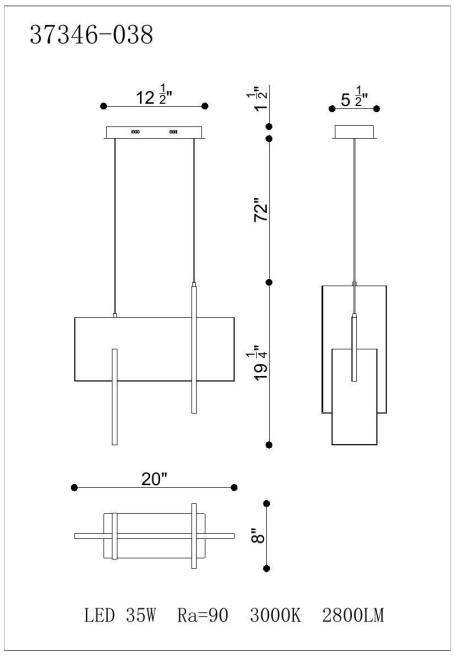

PRODUCT DETAILS

No.	:	37346-010
Product Color	:	GOLD
Product Material	:	METAL
Shade / Accent Colour	:	WHITE
Shade / Accent Material	:	ACRYLIC
Length	:	20"
Width	:	8"
Height	:	19.25"
Overall Height	:	92"
Weight	:	10.3LBS

LIGHT SOURCE DETAILS

Light Source Type	:	INTEGRATED LED
Input Voltage	:	120V
Bulb Voltage	:	120V
Socket Type	:	INTEGRATED
Total Wattage	:	35W
Delivered Lumens	:	910LM
Kelvin	:	3000K
CRI	:	90
Dimmable	:	YES

TECHNICAL DETAILS

Hanging Support Type	:	WIRE
Hanging Support Length	:	72"
Canopy / Backplate Length	:	12.5"
Canopy / Backplate Height	:	1.5"
Canopy / Backplate Width	:	5.5"
IP Rating	:	IP22
Location	:	DRY
Approval	:	
Beam Angle	:	360

PROJECT INFORMATION

Job Name: Date: Type:

Comments: