EUROfase INC.

TEL 905.695.2055 **toll free** 1.800.660.5391
FAX 905.695.2056 **toll free** 1.800.660.5390

33 West Beaver Creek Road Richmond Hill, Ontario Canada L4B 1L8

PISTA, 1-LIGHT 9IN VANITY



PRODUCT DETAILS

No.	:	34133-019
Product Color	:	CHROME
Product Material	:	METAL
Shade / Accent Colour	:	CLEAR
Shade / Accent Material	:	GLASS
Length	:	6.25"
Width	:	6.25"
Height	:	8.75"
Overall Height	:	8.75"
Ext	:	5"
Weight	:	1.7LBS

LIGHT SOURCE DETAILS

Number of Bulbs	:	1
Light Source	:	BULB
Light Source Type	:	EDISON
Input Voltage	:	120V
Bulb Voltage	:	120V
Socket Type	:	E26
Wattage	:	60W
Total Wattage	:	60W
Bulb Included	:	YES
Dimmable	:	YES

OPTIONS AVAILABLE

ITEM NO.	FINISH	SHADE
34133-019	**CHROME**	GLASS
34133-026	**BRONZE**	CLEAR
34133-036	**MATTE BLACK**	GLASS
34133-043	**GOLD**	GLASS

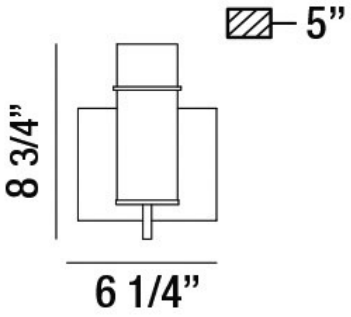

TECHNICAL DETAILS

Hanging Support Type	:	J-BOX
Canopy / Backplate Length	:	6.25"
Canopy / Backplate Height	:	5"
Canopy / Backplate Width	:	1"
Mounting	:	UP
IP Rating	:	IP22
Location	:	DAMP
Approval	:	cULus LISTED
Beam Angle	:	360

PROJECT INFORMATION

Job Name: Date: Type:

Comments: